Teledyne TSS 350 Pin Out for a 3 AXIS Cable

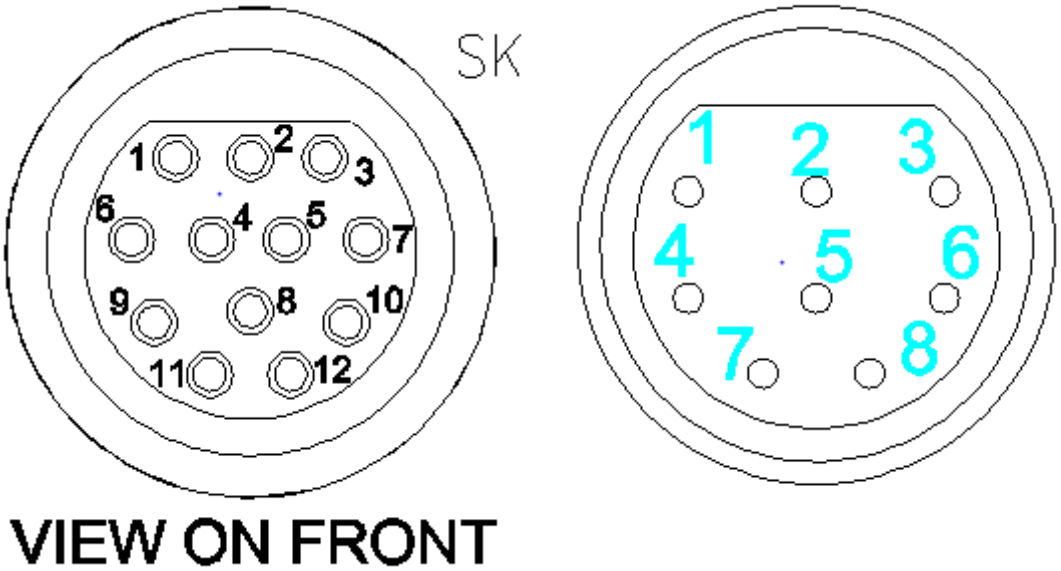

WIRING DETAILS							
WIRE No	WIRE COLOUR/PAIR	WIRE SIZE	SK1(PIN No.)	PL1(PIN No.)	PL2(PIN No.)	PL3(PIN No.)	FUNCTION
1	TP1-BLUE	-	1	1	1	1	G0
2	TP1-WHITE	-	2	2	2	2	G1
3	TP2-YELLOW	-	3	3	N/C	N/C	X+
4	TP2-WHITE	-	4	4	N/C	N/C	X-
5	TP3-GREEN	-	5	N/C	N/C	3	Y+
6	TP3-WHITE	-	6	N/C	N/C	4	Y-
7	TP4-BLACK	-	7	N/C	3	N/C	Z+
8	TP4-WHITE	-	8	N/C	4	N/C	Z-
9	TP5-RED	-	9	5	5	5	+12V
10	TP5-WHITE	-	10	6	6	6	-12V
11	BLUE	1.5mmy'	NOT USED. INSULATE AT EACH END.				N/C
12	BLACK	1.5mmy'	11	7	7	7	AGND
13	SCREEN	-	12	8	8	8	SCREEN